BODINE ELECTRIC COMPANY	PART NO./REV: INFM0018 A
	DESCRIPTION: GEARMOTOR 24A4BEPM-3F METRIC
	SHEET: 1/1 · SCALE: 1:1 · C
	UNLESS OTHERWISE SPECIFIED: UNITS ARE IN mm [INCHES] ANGLES: X°:±3° X.X°:±0.5°

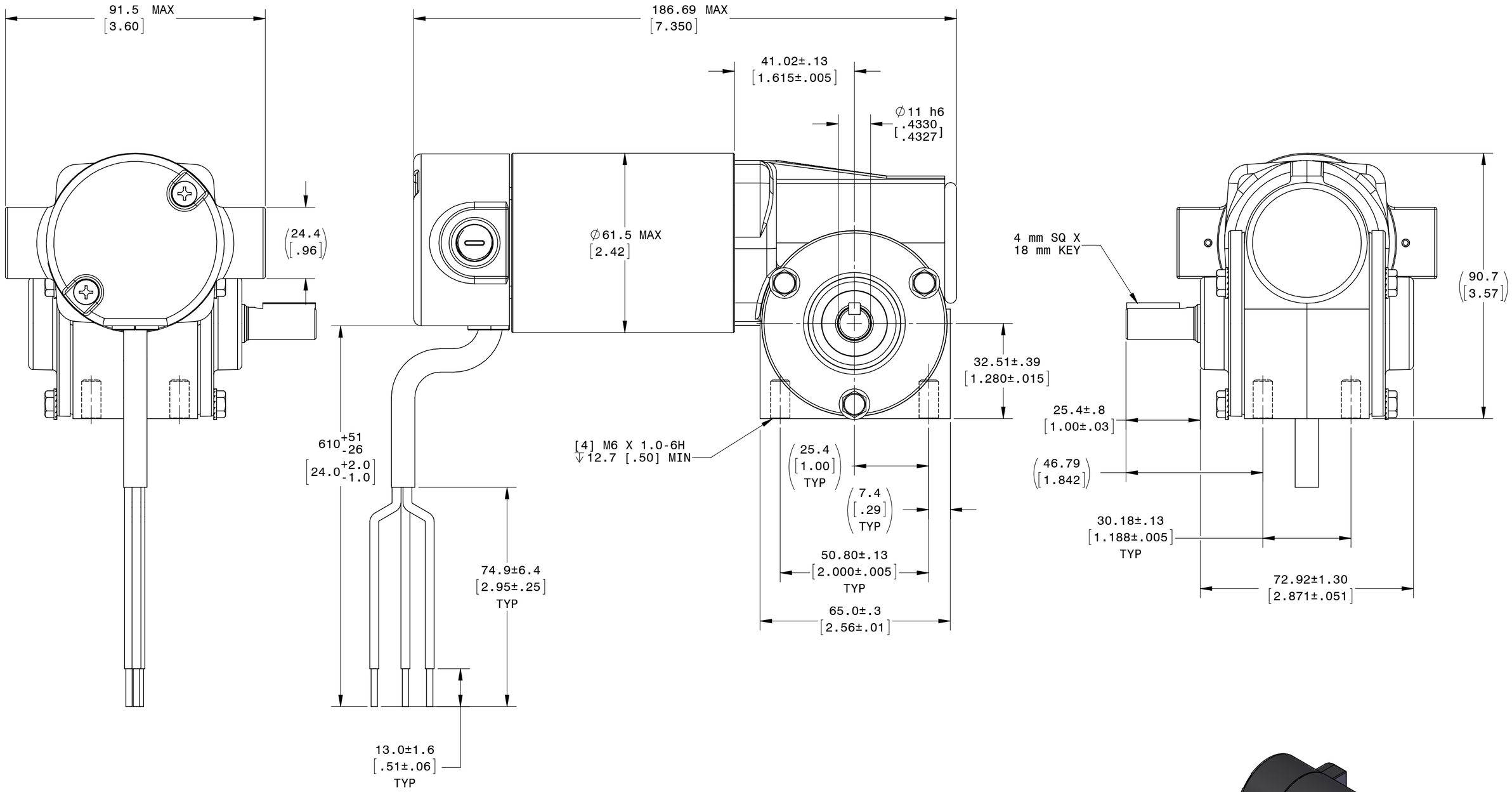

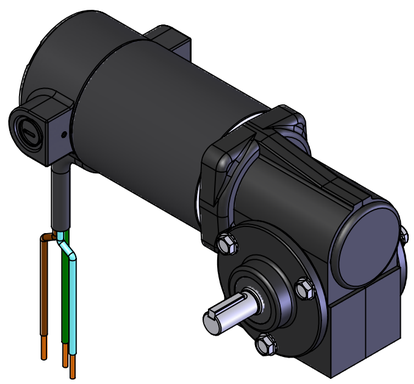

REPRESENTATIVE OF MODEL NUMBER(S):

1094 1096 1098